ARCTIC

SERVICE MANUAL

Compact -Deluxe

ugolini

GB SERVICE MANUAL 4

GB USER MANUAL 10

GB TROUBLE SHOOTING 26

1 INTRODUCTION

Like all mechanical products, this machine will require cleaning and maintenance.
This Service Manual contains maintenance guidelines dedicated to qualified service personnel only.

2 TEMPERATURE CONTROLS

All the units with12 or 20 litres bowls, both Deluxe and Compact series, are equipped with one adjustable thermostat for each bowl. The thermostats are located behind the panel under each bowl (see figure 1).

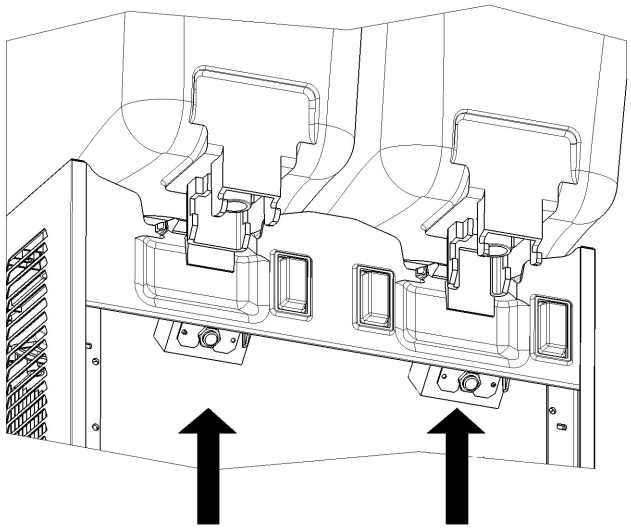

figure 1

It is possible to adjust temperature between 6 °C and 12 °C. On new machines the temperature is factory preset approx at 8°C.

For temperature adjustment proceed as follows:

- to decrease temperature: rotate the setting screw clockwise.

- to increase temperature: rotate the setting screw counterclockwise (see figure 2).

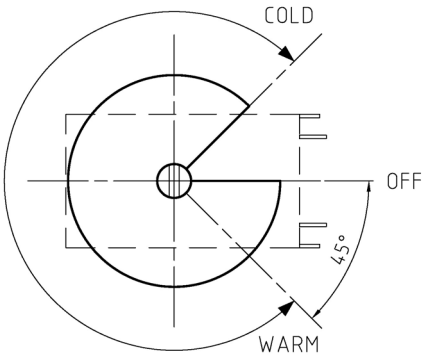

DIAL LAYOUT

ROTATION CLOCKWISE
WARM TO COLD

figure 2

IMPORTANT

Rotating the setting screw of the thermostats completely counterclockwise it is possible to switch off the thermostat itself. This will stop the refrigeration only on single bowl units. On multiple bowls units it is necessary to switch all the thermostats off in order to stop the refrigeration.

IMPORTANT

On multiple bowls units the thermostats are electrically wired in parallel and they directly drive the compressor. It is necessary that all the bowls reach the set temperature to stop the refrigeration (all the thermostats electrically open). It is enough that only in one bowl the temperature is higher than the setting to start the refrigeration (only one thermostat electrically closed).
To adjust temperature on multiple bowls machines it is necessary to adjust all the thermostats together at the same setting.
On multiple bowls units independent temperature adjustment for each bowl is not available.

For Artic Compact 5 and 8 series the situation is the following:

Arctic Compact 5-8/1 are equipped with one thermostat to control the themperature of the bowl.

Arctic Compact 5-8/2 are equipped only with one thermostat to control the temperature of the bowl at the right.
Arctic Compact 5-8/3 are equipped only with one thermostat to control the temperature of the central bowl.

Arctic Compact 5-8/4 are equipped with two thermostats to control the temperature of the first and the third bowl from right.

The thermostats are always located behind the faucet side panel under the coresponding bowl.

This means that the refrigeration on and off depend from the setting of the temperature only of the bowls equipped with the thermostats.

It is possible to set the temperature between 6 °C and 12 °C. On new machines the temperature is factory preset approx at 8°C.

For temperature adjustment proceed as follows:

- to decrease temperature: rotate the setting screw clockwise.

- to increase temperature: rotate the setting screw counterclockwise (see figure 2)

Independent temperature setting for each bowl is not possible.

The following table summarizes the number of thermostats present on each model:

MODEL	NUMBER OF THERMOSTAS
Arctic Compact 5/1 - 8/1	1
Arctic Compact 5/2 - 8/2	1 - RIGHT BOWL
Arctic Compact 5/3 - 8/3	1 - CENTRAL BOWL
Arctic Compact 5/4 - 8/4	2 - FIRST AND THIRD BOWLS
Arctic Compact 12/1 - 20/1	1
Arctic Compact 12/2 - 20/2	2
Arctic Compact 12/3 - 20/3	3
Arctic Compact 12/4 - 20/4	4
Arctic Deluxe 12/1 - 20/1	1
Arctic Deluxe 12/2 - 20/2	2
Arctic Deluxe 12/3 - 20/3	3
Arctic Deluxe 12/4 - 20/4	4

3 PUMPS

Arctic Deluxe series dispensers are equipped with spray pumps. Each pump is magnetically driven by an independent electric motor.

These machines are equipped with one Main Switch to power ON and OFF refrigeration and with one Pump Switch for each bowl (see user manual for controls details).

Spray pumps are suitable for a large variety of products but it is better not to spray coffee, tea, natural juices or other beverages that can foam. To avoid spray on these machines it is necessary to replace the original impeller with a different one (grey impeller pn 33900-01201) and to remove the spray tube from the bowl. In addition the original bowl can be replaced with a dedicated one (pn 22900-00010 or 22900-04810) to perform even more gentle agitation.

Arctic Compact series dispensers are equipped with submerged pumps. On double machines the pumps are driven by only one motor through a transmission belt and three pulleys. This motor also works as a fan. On triple machines two pumps are driven by one motor with the same system of double units and the third is driven by a single motor. On four bowls machies the pumps are driven by two motors (see figure 3).

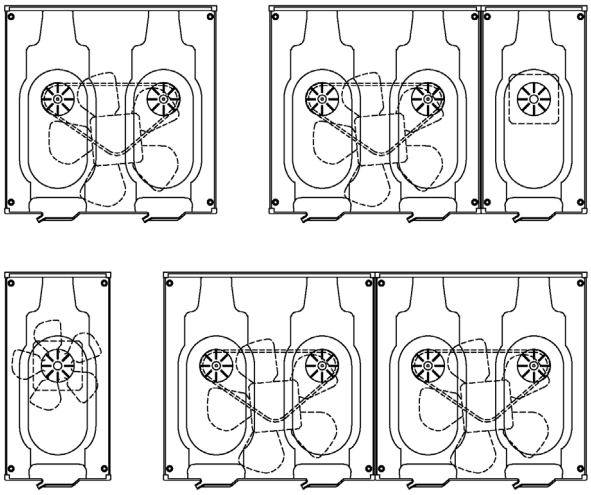

figure 3

These machines are equipped only by one Main Switch to power ON and OFF all the functions, refrigeration and pumps.

Submerged pumps are suitable for almost all kind of beverages and particularly for coffee, tea, natural juices or other beverages that can foam. In case of need it is possible to equip Arctic Compact dispensers with spray pumps replacing the impellers (pn 33900-01204 or 33900-01205), the bowls (pn 22900-01900, 22900-02000, 22900-00000 and 22900-04800) and installing the spray tubes.

The following table summarizes all the available impellers:

PART NUMBER	COLOUR	BOWLS CAPACITY [litres]	MIXING SYSTEM	VOLATGE
33900-01200	WHITE	12, 20	SPRAY	230V 50HZ, 240V 50HZ
33900-01201	GREY	5, 8, 12, 20	SUBMERGED	230V 50HZ, 240V 50HZ 115V 60HZ, 220V 60HZ
33900-01204	BLUE	5, 8 12, 20	SPRAY SPRAY	230V 50HZ, 240V 50HZ 115V 60HZ, 220V 60HZ
33900-01205	RED	5, 8	SPRAY	115V 60HZ, 220V 60HZ

The following table summarizes all the available bowls:

PART NUMBER	BOWLS CAPACITY [litres]	MIXING SYSTEM
22900-01900	5	SPRAY
22900-01910	5	SUBMERGED
22900-02000	8	SPRAY
22900-02010	8	SUBMERGED
22900-00000	12	SPRAY
22900-00010	12	SUBMERGED
22900-04800	20	SPRAY
22900-04810	20	SUBMERGED

And the following one specifies all the available spray tubes:

PART NUMBER	BOWLS CAPACITY [litres]
22900-00202	5
22900-00203	8
22900-00201	12
22900-00200	20

Combined configuration can be realized for particular needings.

3. 1 IMPELLERS

The impeller must spin freely on its pivot to perform efficient mixing and cooling. For this purpose keep clean both the impeller and the pivot from traces of sugar, pulp or other. If necessary, lube the parts with food grade lubricant.
A self-lubricating washer is moulded into the bottom of the impeller. Regularly check this part and, if worn, replace the impeller with a new one (see figure 4).

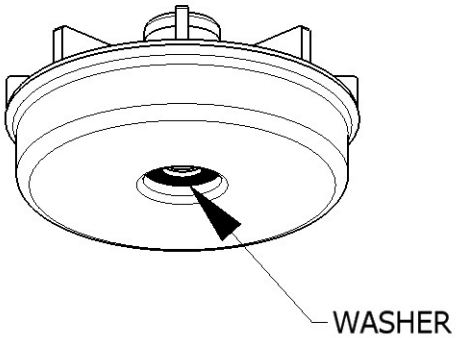

figure 4

3. 2 MAGNETIC COUPLING

The impellers are magnetic coupled with their respective motors. The magnetic gap is factory preset and does not require to be adjusted. In case of loss of magnetic lock, one or more of the following problems can be present: bent pump motor bracket due to a transport shock, impeller improper spinning due to worn, damaged or dirty parts.

3. 3 NOISY IMPELLERS

In case of noisy impellers, it is necessary first of all to remove them from the pivots and power the unit on. If the noise is still present it is necessary to power the unit off, unplug it and remove the panels in order to check the pumps motors assemblies. Possible causes of noise can be the following: faulty electric motor, improper magnetic alignment due to a bent

bracket, fan blade not rotating free from obstacles or some lose component vibrating during machine working.

On Arctic Compact with multiple bowls it is necessary also to remove the transmission belt from the pulleys and power on the unit. If the noise is still present the cause can be the electric motor once again. Otherwise, if the noise is not present anymore, it is necessary to remove the magnetic pulleys assemblies and check for the integrity of their ball bearings. If necessary replace the entire magnetic pulley assembly.

If, removing the impellers, the noise is not present anymore it means that the cause of can be in the impellers or in the magnetic coupling. Check for worn impellers and if necessary replace them. Clean the impellers and the pivots and if necessary lubricate them with food grade lubricant. Install the impellers and put some water into the bowls. If the noise do not disappear it is necessary to check once again the pump motor bracket planarity.

IMPORTANT

The impellers are designed to spin always submerged and wet. It is very important to avoid to have them spinning dry to prevent worn out. For this reason on Arctic Deluxe always switch off pump of empty bowls and on Arctic Compact remove the impeller of empty bowls or fill them with water.

4 FAUCETS

Two different faucets are available both for Arctic Deluxe and Arctic Compact series: pinch tube faucet and stainless steel gravity faucet.

4. 1 PINCH TUBE FAUCET

This faucet is suitable for all kind of products, liquid or thick, with or without pulp or other solid particles. In case of dripping, it is necessary to drain the product out of the bowl, remove the pinch tube, clean it with fresh water and check for wear on it. If necessary, replace it with a new one.

4. 2 STAINLESS STEEL GRAVITY FAUCET

This faucet is suitable for liquid product without pulps or other solid particles. In case of dripping, it is necessary to drain the product out of the bowl, remove the stainless steel piston, clean it with fresh water and check for wear of the rubber gasket. If necessary, replace it with a new one. It is also necessary to clean the piston housing in the bottom of the bowl and check for the integrity of the rim around the piston hole (see figure 5).

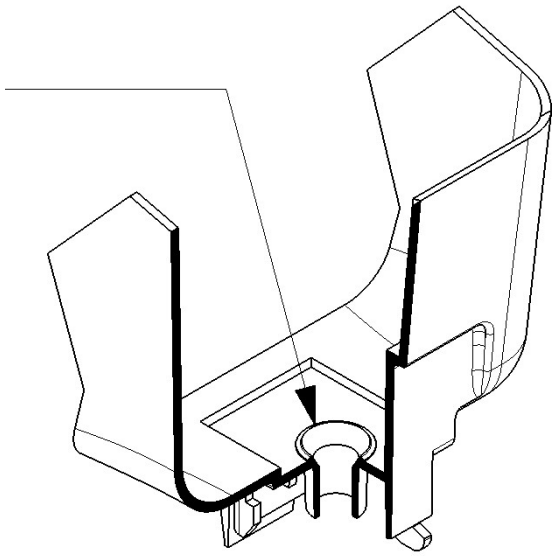

figure 5

5 SLOW MIXING SYSTEM

The dispensers of Arctic Deluxe series are available also with slow mixers. Two kind of slow mixers are available: one with magnetic driving (A) and the other with mechanic driving (B). The first one is suitable for delicate drinks like tea or coffee while the other one is suitable also for thick drinks (see figure 6).

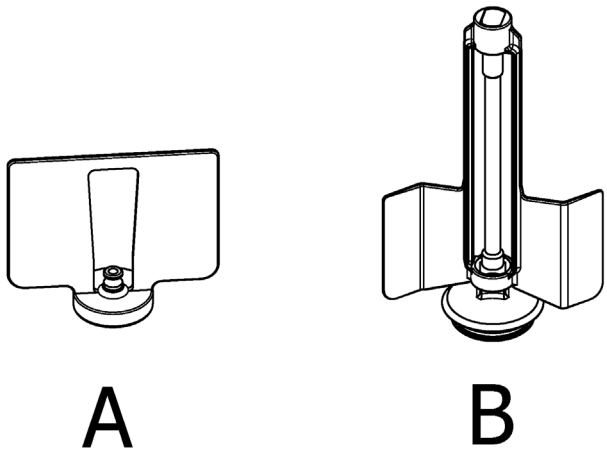

figure 6

In case of magnetic slow mixer improper rotation, the cause can be a faulty drive motor, a magnetic mixer that can't freely rotate on its pivot or ice on the evaporator caused by very low level of product into the bowl.
In case of direct slow mixer improper rotation the cause can be a foulty motor or an excessive thickness of the drink.

6 REFRIGERANT CIRCUIT SERVICE

6. 1 CHECKING FOR REFRIGERANT LEAKS

The following procedure is the recommended approach to systematically inspect the entire system for refrigerant leaks

NOTE: when using refrigerant detector, follow along the bottom

side of the copper tubing since the refrigerant gas is heavier than air. Where copper tubing is protected by an insulating jacket, check for leaks at both ends of each jacket section.

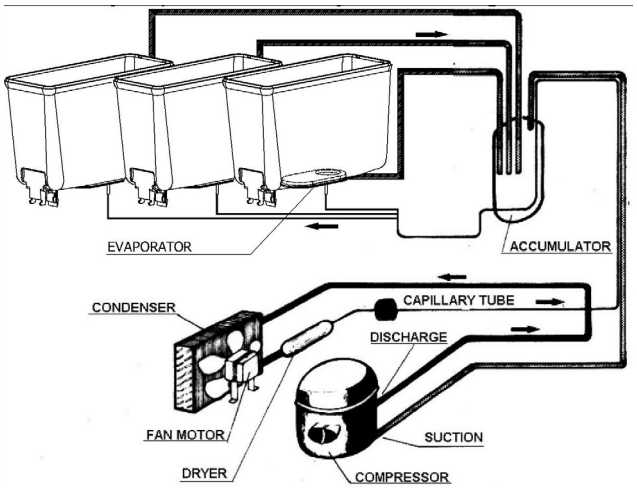

figure 7

Referring to the diagram (see figure 7), perform the following steps:

1 Start inspection at the high pressure line of the compressor. Check around the soldered connection.
2 Follow the copper tubing to the condenser and check around the soldered connections at the top and bottom of the condenser.
3 Check also along the copper curves on both sides of condenser.
4 Follow the copper tubing to the evaporators, checking around the soldered connections of dryer.
5 Remove mixer motors and check the inlet (capillary) and outlet (suction) tubing.
6 Check the copper tubing all the way back to the compressor.
7 Check around the low side connections of the compressor suction and process tubes.

IMPORTANT

To check for a leak in the low side of the system, it is advisable to have the evaporators at least at ambient temperature.

If a leak has been detected, seal it and make a new refrigerant charge as per instructions in the following paragraphs.

6. 2 DISCHARGING

1 Remove the dispenser panels.
2 If not present install a charging valve on the compressor process tube.
3 Remove the screw cap from the compressor process tube.
4 Connect the process tube to the LOW part of the gauge set.
5 Connect the VAC port of the gauge set to an adequate approved gas recovery system.

ATTENTION

The refrigerant gas could be highly acid and toxic.

6 Open the LOW and VAC valves and recover the refrigerant.
7 Once the recovery operation is completed, close the LOW and VAC valves and disconnect the recovery system.(see figure 8)

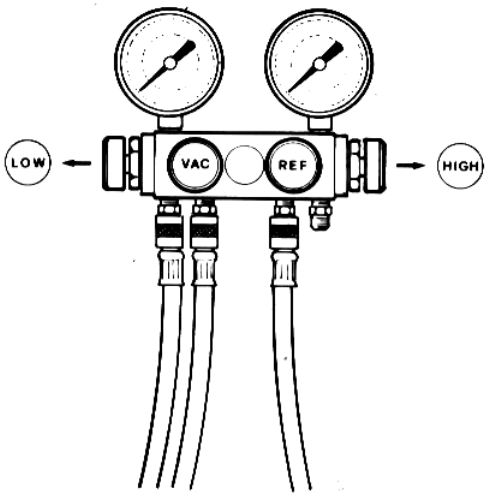

figure 8

6. 3 EVACUATING

Always install a brand new liquid line filter dryer before evacuating.
1 Connect the REF port of the gauge set to the charging unit.
2 Connect the VAC port of the gauge set to the vacuum pump and open the VAC valve.
3 Open the line valve of the charging unit and, for a while, also the REF valve, so as to purge air from the REF hose.
4 Open the LOW valve of the gauge set and turn on the vacuum pump for a minimum of half an hour.
5 While the pump is running, close the VAC valve once a vacuum has been established.
6 Turn off the vacuum pump.

6. 4 CHARGING

The gauge set is usually with four ports and four valves (see figure 8). This is the easiest option to be found in the market since it allows the charging through both low and high side of the system. Our refrigeration systems are manufactured so as to be chargeable through the compressor process tube only (low side): thus, the HI port is never mentioned nor used in the following procedure and therefore the HI valve must be kept closed.
1 Determine how many ounces/grams should be filled by the charging unit. This information can be found on the dispenser data plate.
2 Remove bowls and mixers from the dispenser.
3 Plug in the dispenser and turn on the power switch.
4 Open the line valve of the charging unit.
5 Open the REF valve very slowly so as to allow the refrigerant to be pulled into the system as a gas.
6 When the amount of refrigerant listed on the data plate has been used, the system is charged. Close the REF valve and the charging unit line valve and allow the compressor to run few minutes.
7 Ensure that all evaporator plates are covered with frost.
8 Close the LOW valve, disconnect the LOW hose from the compressor process tube and tighten the screw cap.

The following table reports the suction and discharge pressures of the machines with the different refrigerants.
They must be verified under the following conditions:
Ambient temperature: 32 °C
Product temperature in the bowls: 5 °C
Evaporation temperature approx -5 °C
Condensation temperature approx 50°C.

Refrigerant	Suction (low) pressure	Discharge (high) pressure
R134a	1,43 bar	12,17 bar
R22	3,20 bar	18,39 bar
R404a	4,10 bar	21,93 bar

6. 5 COMPRESSOR BURN-OUT

To determine if a burn-out has occurred, perform the following steps:

1 Disconnect the unit from power source.

2 Remove wiring from the compressor terminals.

3 Using an ohmmeter, check for ground between the terminals and the compressor housing. If a reading exists, the compressor has shorted to ground.

In this case compressor must be replaced as per following steps:

4 Recover the refrigerant using an approved refrigeration recovery system as per DISCHARGING instructions.

5 Remove the burned-out compressor.

6 Correct the system fault which caused the burn-out. Check the condition of the capacitor(s) and compressor relay.

7 Install a new compressor and liquid line filter dryer.

8 Evacuate and charge the system as per EVACUATING and CHARGING instructions.

7 ROUTINE MAINTENANCE

DAILY

Inspect the machine for signs of product leaks past seals and gaskets. If proper assembly does not stop leaks around seal or gaskets, check for improper lubrication, worn or damaged parts. Replace parts as needed with original spare parts from the supplier.

WEEKLY

Clean and sanitize the machine following the procedures illustrated on the Operator's Manual of the unit. Check for worn impellers, bowl gaskets, faucet pinch tubes or stainless steel piston gaskets. Replace parts as needed with original spare parts from the supplier.

MONTHLY

Clean all internal components, primarily the condenser, using compressed air, vacuum or a soft brush.
To clean these internal parts, unplug the unit and remove the panels. Condenser fins are very sharp. Use extreme caution when cleaning.
On **Arctic Deluxe** dispensers the condenser is located on the back of the unit and air flow is from back to sides (A). To clean the condenser it is necessary to remove the back panel.
On **Arctic Compact** dispensers the condenser is always located on the back of the unit but air flow if from sides to back (B). To clean the condenser it is necessary to remove the faucet side panel and to clean it from the inside of the unit (see figure 5).

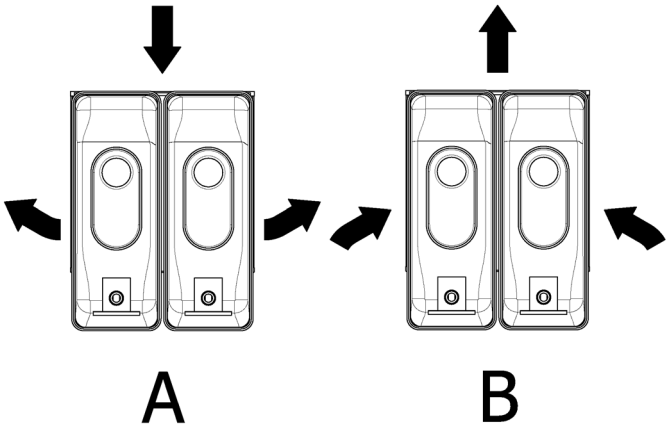

figure 9

The following key operation procedures, extracted from the Operator's Manual, are quoted here too so that service personnel may help end users to achieve the best performances and results.

1 TECHNICAL CHARACTERISTICS

ARCTIC COMPACT 5/8 lt

			1/5 1/8	2/5 2/8	3/5 3/8	4/5 4/8
Transparent removable bowls		n	1	2	3	4
Capacity of each bowl, approx.		l	5 8	5 8	5 8	5 8
Dimensions:						
width		cm	18	25	37	50
depth		cm	40	40	40	40
height	5 lt 8 lt	cm	55 63	55 63	55 63	55 63
Net weight, approx.	5 lt 8 lt	kg	13 13	15 17	21 21	23 23
Gross weight, approx.	5 lt 8 lt	kg	15 15	17 19	23 23	26 26
Adjustable thermostats		n	1	1	1	2

ARCTIC COMPACT 12/20 lt

			1/12 1/20	2/12 2/20	3/12 3/20	4/12 4/20
Transparent removable bowls		n	1	2	3	4
Capacity of each bowl, approx.		l	12 20	12 20	12 20	12 20
Dimensions:						
width		cm	18	36	54	72
depth		cm	47	47	47	47
height	12 lt 20 lt	cm	61 71	61 71	61 71	61 71
Net weight, approx.	12 lt 20 lt	kg	20 22	24 32	36 42	44 55
Gross weight, approx.	12 lt 20 lt	kg	22 25	28 36	40 46	49 59
Adjustable thermostats		n	1	2	3	4

ARCTIC DELUXE 12/20 lt

			1/12 1/20	2/12 2/20	3/12 3/20	4/12 4/20
Transparent removable bowls		n	1	2	3	4
Capacity of each bowl, approx.		l	12 20	12 20	12 20	12 20
Dimensions:						
width		cm	18	36	54	72
depth		cm	47	47	47	47
height	12 lt 20 lt	cm	57 67	57 67	57 67	57 67
Net weight, approx.	12 lt 20 lt	kg	20 22	24 32	36 42	44 55
Gross weight, approx.	12 lt 20 lt	kg	22 25	28 36	40 46	49 59
Adjustable thermostats		n	1	2	3	4

Hermetic compressor

Air-cooled condenser

Overload protector

Noise level lower than 70 dB (A)

IMPORTANT

Read electrical ratings written on the data plate of the individual units; the data plate is adhered on the dispensing side panel of the unit, just behind the drip tray (the right side drip tray in multiple bowl models). The serial number of the unit (preceded by the symbol #) is adhered just below the right bowl. Data plate specifications will always supersede the information in this manual.

Specifications are subject to change without notice.

2 INTRODUCTION

Please read all sections of this manual thoroughly to familiarize yourself with all aspects of the unit.
Like all mechanical products, this machine will require cleaning and maintenance. Besides, dispenser working can be compromised by operator's mistakes during disassembly and cleaning. It is strongly recommended that personnel responsible for the equipment's daily operations, disassembly, cleaning, sanitizing and assembly, go through these procedures in order to be properly trained and to make sure that no misunderstandings exist.

3 INSTALLATION

1 Remove the corrugate container and packing materials and keep them for possible future use.

IMPORTANT

When handling the machine never grasp it by the bowls or by the evaporator cylinders. The manufacturer refuses all responsibilities for possible damages which may occur through incorrect handling.

2 Inspect the uncrated unit for any possible damage. If damage is found, call the delivering carrier immediately to file a claim.

3 Install the unit on a counter top that will support the combined weight of dispenser and product **bearing in mind what is stated in the preceding point 1 IMPORTANT warning.**

4 A minimum of 15 cm (6") of free air space all around the unit should be allowed to guarantee adequate ventilation.

5 Ensure that the legs are screwed tightly into the base of the machine.
Replace the standard legs originally installed with the 100 mm (4") legs whenever they are provided with the unit.

6 Before plugging the unit in, check if the voltage is the same as that indicated on the data plate. Plug the unit into a grounded, protected single phase electrical supply according to the applicable electrical codes and the specifications of your machine. Should you prefer to connect the unit directly to the mains, connect the supply cord to a 2-pole wall breaker, whose

contact opening is at least 3 mm. Do not use extension cords.

ATTENTION

Failure to provide proper electrical ground according to applicable electrical codes could result in serious shock hazard.

7 The unit doesn't come presanitized from the factory. Before serving products, the dispenser must be disassembled, cleaned and sanitized according to this handbook instructions (chapter 5.3 CLEANING AND SANITAZING PROCEDURES).

IMPORTANT

Install the dispenser so that the plug is easily accessible.

4 TO OPERATE SAFELY

1 Do not operate the dispenser without reading this operator's manual.
2 Do not operate the dispenser unless it is properly grounded.
3 Do not use extension cords to connect the dispenser.
4 Do not operate the dispenser unless all panels are restrained with screws.
5 Do not obstruct air intake and discharge openings: 15 cm (6") minimum air space all around the dispenser.
6 Do not put objects or fingers in panels louvers and faucet outlet.
7 Do not remove bowls, augers and panels for cleaning or routine maintenance unless the dispenser is disconnected from its power source.

ATTENTION

In case of damages, the power cord must be replaced by qualified personnel only in order to prevent any shock hazard.

8 This unit is not meant to be used outside.
9 This unit is not to be installed in areas subject to waterspouts..
10 Do not use water-jets to clean the unit.
11 This unit can work in a room temperature range between +5° and +32°C.

5 OPERATING PROCEDURES

1 Clean and sanitize the unit according to the instructions in this manual. See chapter 5.3 CLEANING AND SANITIZING PROCEDURES.
2 Fill the bowls with product to the maximum level mark. Do not overfill.
The exact quantity of product (expressed as liters and gallons) is shown by marks on the bowl.
3 In case of products to be diluted with water, potable water, pour water into bowl first, then add correct quantity of product. In case of natural squashes, it is advisable to strain them, in order to prevent pulps from obstructing the faucet outlet.
4 Install the covers and check that they are correctly placed over the bowls.
5 Set the control switches as shown in chapter 5.1 DESCRIPTION OF CONTROLS.
6 The dispenser must always run with the covers installed to prevent a possible contamination of the product.
7 Always leave the dispenser on, as the refrigeration stops automatically when the beverage reaches the dispensing temperature. The mixing devices will continue to turn.
8 To maintain a high standard of flavour, keep refrigeration and mixing devices on during the night when beverage is in the bowl.

IMPORTANT

Operate the dispenser with food products only.

9 On Arctic Deluxe series machines equipped with lighted top covers it is necessary to turn the cover for 180 degrees to switch light off. (see figure 1)

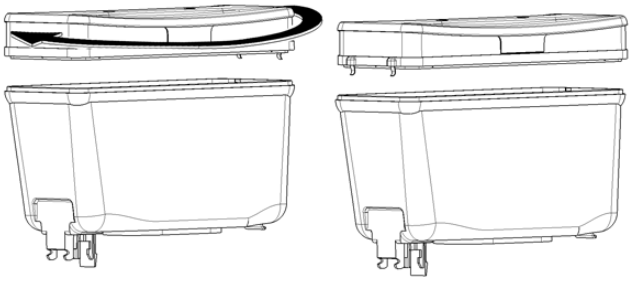

figure 1

5. 1 DESCRIPTION OF CONTROLS

The dispenser is equipped with a power switch and each bowl is operated by a mixing device switch.
Their functions are as follows:

Power switch

0 position	OFF ○	:	Power is turned OFF to all functions.
I position	ON ■	:	On Arctic Deluxe series this position operates the fan motor and makes the mixing devices suitable to be turned on by relevant switches. On arctic Compact series this position operates all the funtions of the dispenser.

Mixing device switch (Arctic Deluxe series only)

0 position	OFF ○	:	OFF.
I position	■	:	Mixing device runs.

To operate the dispenser

1 Set power switch to I position.
2 Set mixing device switch(es) to I position.

5. 2 OPERATION HELPFUL HINTS

1 The length of time for cooling down the product is governed by many variables, such as ambient temperature and beverage initial temperature.

2 To shorten product cooling down time and increase productivity, it is advisable to pre-chill the product to be used in the dispenser.

3 To shorten product cooling down time and increase productivity, the bowl should be refilled after the product level drops lower than half and at the start of each day.

4 The dispenser must be able to emit heat.
In case it seems excessive, check that no heating source is close to the unit and air flow through the slotted panels is not obstructed by wall or boxes. Allow at least 15 cm (6”) of free clearance all around the dispenser.
In any case if the product in the bowls is cold the unit is running properly.

5 How to reset beverage temperature:to reset beverage temperature please apply to a technician.
The proper temperature is preset at the factory.

5. 3 CLEANING AND SANITIZING PROCEDURES

Cleaning and sanitizing of the dispenser are recommended to guarantee the conservation of the best product taste and the highest unit efficiency. This section is a procedural guideline only and is subject to the requirements of the local Health Authorities.

Prior to the disassembly and cleaning, the machine must be emptied of product.

5. 3. 1 DISASSEMBLY

ATTENTION

Before any disassembly and/or cleaning procedure make sure that the dispenser is disconnected from its power source by unplugging it or switching off the 2-pole wall breaker.

1 Remove cover from the bowl.

2 Remove the empty bowl by pulling lever (1) and lifting its **front side (faucet side)** up and off bowl gasket (see figure 2).

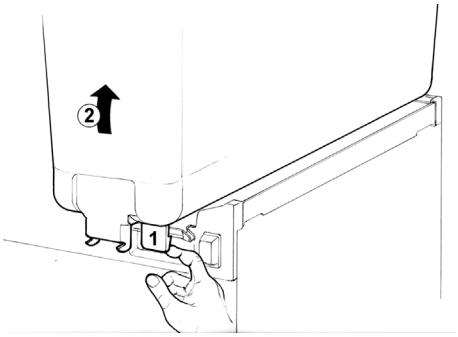

figure 2

3 Remove the bowl gasket.

4 Remove the pump impeller from its location.

5 **Pinch tube faucet**: push the dispensing handle (1) and take the pinch tube off from its seat (2) (see figure 3).

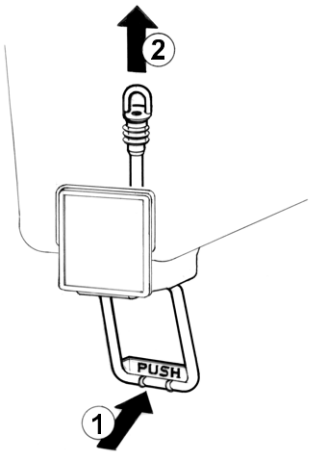

figure 3

6 **Gravity faucet:** extract the piston and then remove the dispensing handle (see figure 4).

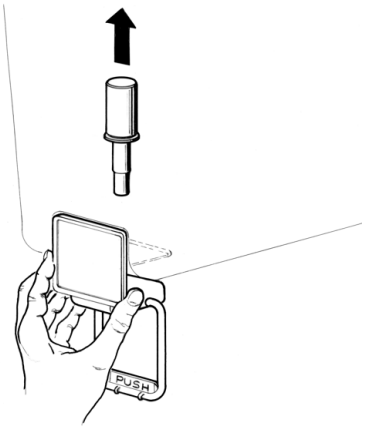

figure 4

7 Slide drip tray out and empty it.

5. 3. 2 CLEANING

IMPORTANT

Do not attempt to wash any machine components in a dishwasher.

ATTENTION

Before any disassembly and/or cleaning procedure make sure that the dispenser is disconnected from its power source.

1 Prepare at least two gallons of a mild cleaning solution of warm (45-60 °C 120-140 °F) potable water and dishwashing detergent. Do not use abrasive detergent.
Important: if present, follow label directions, as too strong a solution can cause parts damage, while too mild a solution will

not provide adequate cleaning.

IMPORTANT

In order to prevent any damages to the dispenser, use only a detergent suitable with plastic parts.

2 Using a brush, suitable for the purpose, thoroughly clean all disassembled parts in the cleaning solution.

ATTENTION

When cleaning the machine, do not allow excessive amounts of water around the electrically operated components of the unit. Electrical shock or damage to the machine may result.

3 Do not immerse the lighted top covers in liquid. Wash them apart with the cleaning solution. Carefully clean their undersides.

4 In the same manner clean the evaporator plate(s) using a soft bristle brush.

5 Rinse all cleaned parts with cool clean water.

5. 3. 3 SANITIZING

Sanitizing should be performed immediately prior to starting the machine. Do not allow the unit to sit for extended periods of time after sanitization.

1 Wash hands with a suitable antibacterial soap.

2 Prepare at least two gallons of a warm (45-60 °C 120-140 °F) sanitizing solution (100 PPM available chlorine concentration or 1 spoon of sodium hypoclorite diluted with two litres of water) according to your local Health Codes and manufacturer's specifications.

3 Place the parts in the sanitizing solution for five minutes.

4 Do not immerse the lighted top covers in liquid. Carefully wash their undersides with the sanitizing solution.

5 Place the sanitized parts on a clean dry surface to air dry.

6 Wipe clean all exterior surfaces of the unit. Do not use abrasive cleaner.

5. 3. 4 ASSEMBLY

1 Slide the drip tray into place.

2 **Pinch tube faucet:** push the dispensing handle (1) and insert the pinch tube into its vertical seat in the bowl bottom(2). Lightly pull the pinch tube end downwards til it is well arranged (3) (see figure 5).

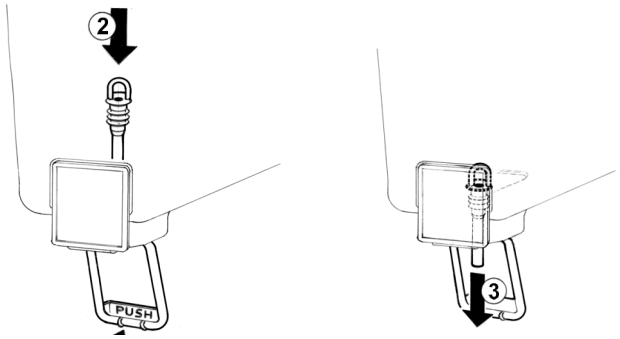

figure 5

3 **Gravity faucet**: install the faucet handle and the piston with its gasket (see figure 6).

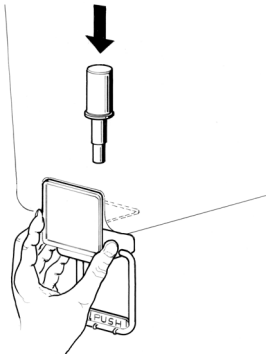

figure 6

4 Fit the bowl gasket to the evaporator. Note: the larger brim of the gasket must face against the drip plate (see figure 7).

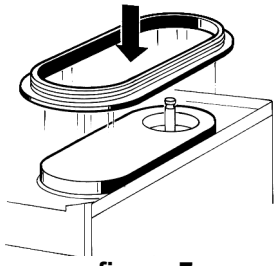

figure 7

5 Place bowl on the unit. Wet the gasket for ease of insertion. Please take care that the hook on the backside of the bowl be inserted properly in its seat on the upper drip plate. (see figure 8).

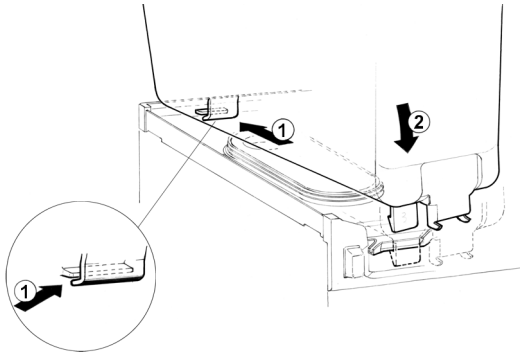

figure 8

6 Use fresh product to chase any remaining sanitizer from the bowl(s). Drain this solution. Do not rinse out the machine.

5. 4 IN-PLACE SANITIZATION

Daily: The In-Place Sanitization prior to starting the machine may be performed, if needed, only as further precaution, in addition to the Disassembled Parts Sanitization described before, but never in lieu of it.

1 Prepare two gallons of a warm (45-60°C, 120-140 °F) sanitizing solution (100 PPM available chlorine concentration or 1 spoon of sodium hypoclorite diluted with two litres of water) according to your local Health Codes and manufacturer's specifications.

2 Pour the solution into the bowl(s).

3 Using a brush suitable for the purpose, wipe the solution on all surfaces protruding above the solution-level and on the underside of the top cover(s).

4 Install the top cover(s) and operate the unit. Allow the solution to agitate for about two minutes. Drain the solution out of the bowl(s).

5 Use fresh product to chase any remaining sanitizer from the bowl(s). Drain this solution. Do not rinse out the machine.

6 ROUTINE MAINTENANCE

1 Replacement of lighted top cover bulbs (see figure 9) :
- Remove the fixing screws placed in the upper part of the top cover,
- remove the lower part and replace the bulbs (using a 24-28V 21W max bulbs).
- Reassemble the top cover and replace the fixing screws.

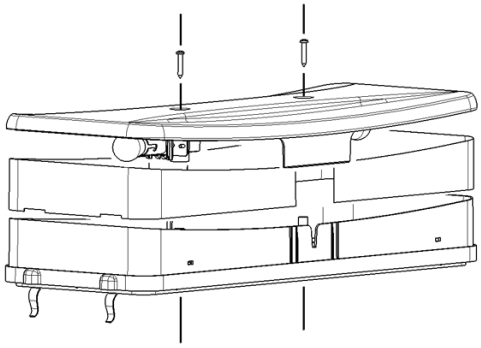

figure 9

2 Daily: inspect the machine for signs of product leaks past seals and gaskets. If proper assembly does not stop leaks around seals or gaskets, check for improper lubrication, worn or damaged parts. Replace parts as needed with original spare parts from the supplier.

6. 1 MAINTENANCE (TO BE CARRIED OUT BY QUALIFIED SERVICE PERSONNEL ONLY)

Montly: clean all internal components, primarily the condenser, using compressed air.
To clean these internal parts, unplug the unit or switch off the 2-pole wall breaker, then remove front panel (dispensing side).
Condenser fins are very sharp. Use extreme caution when cleaning.

The following Spare Parts List, extracted from the Operator's Manual, are quoted here too for general reference only. To order spare parts please make refernece to the Spare Part List included in the Operator's Manual supplied with each dispenser.

GB

SPARE PARTS LIST ARCTIC COMPACT 5/8 LT MODEL

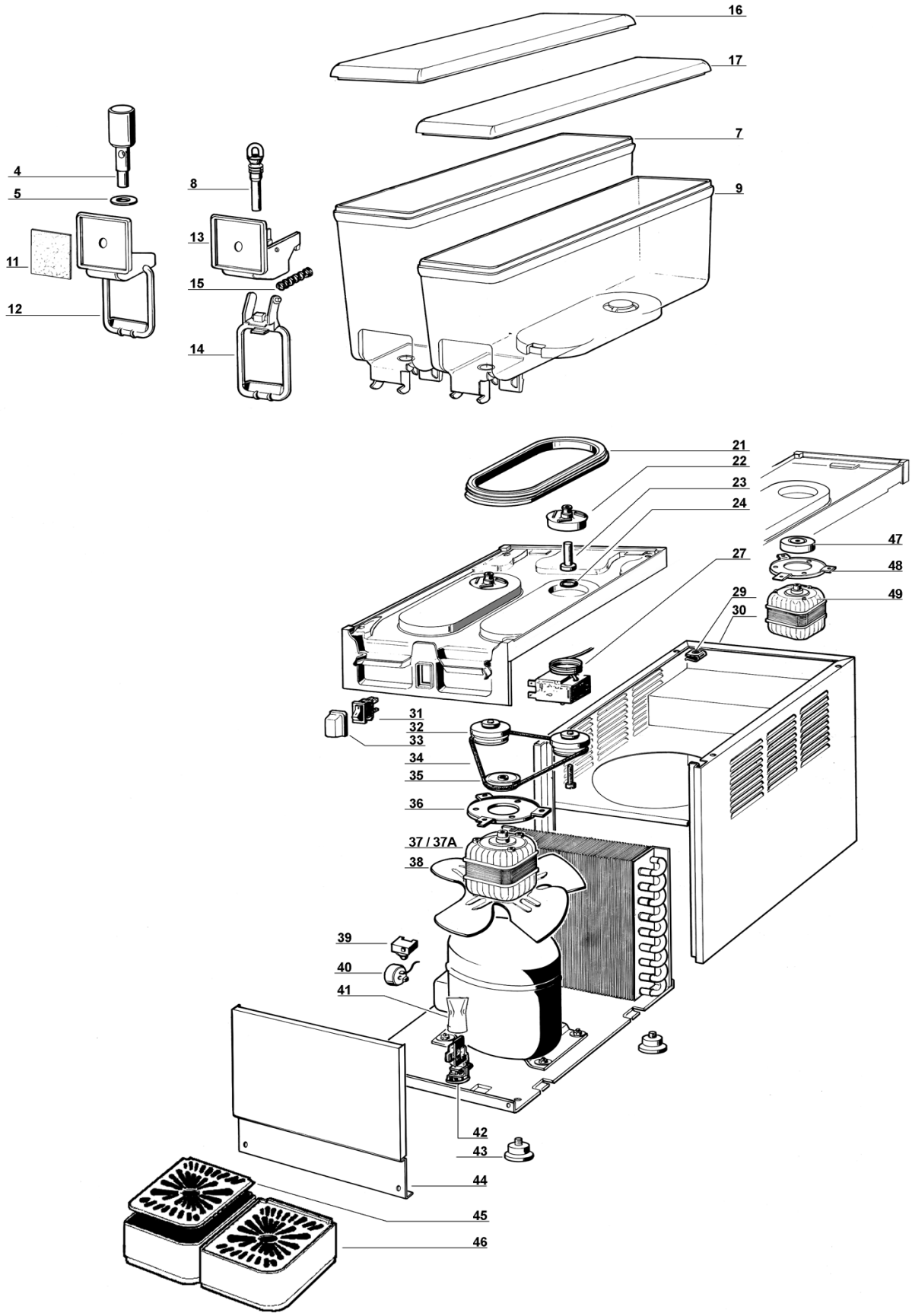

4	**22800-21900**	Faucet piston
5	**10028-02500**	Faucet gasket
7	**22900-02010**	8 lt bowl
8	**21703-00000**	Pinch tube
9	**22900-01910**	5 lt bowl
11	**10029-00000**	Picture
12	**22900-00500**	Push handle
13	**22900-00800**	Faucet cover
14	**22900-00501**	Push handle
15	**22800-02600**	Faucet spring
16	**22900-01300**	8 lt bowl cover
17	**22900-01300**	5 lt bowl cover
21	**22800-17200**	Bowl gasket
22	**33900-01201**	Impeller
23	**22900-00600**	Central pivot
24	**22040-00000**	Central pivot OR
27	**21087-00000**	Thermostat
29	**10554-45000**	Clip
30	❑❑❑	Cabinet
31	**21125-00000**	Switch
32	**33900-01052**	Pulley, magnet and spacer assembly
33	**22800-05100**	Switch cap
34	**22900-03602**	Belt
35	**22800-02201**	Driving pulley
36	**22800-04800**	Motor bracket
37	**22800-18921**	Fan/pump motor for 1 bowl
37A	**22900-03011**	Fan/pump motor for 2, 4 bowls
38	❑❑❑	Fan
39	✻✻✻	Relay
40	✻✻✻	Overload protector
41	**22800-12700**	Terminal block cover
42	**22800-05500**	Terminal block with cable clamp
43	**22800-10000**	Rubber leg
44	❑❑❑	Dispensing side panel
45	❑❑❑	Drip tray cover
46	❑❑❑	Drip tray
47	**33800-00803**	Motor magnet for 1, 3 bowls
48	**22800-04800**	Motor bracket
49	**22800-04706**	Pump motor 3 bowls

✻✻✻ **Please order what printed on piece**

❑❑❑ **See table**

❑❑❑

	1/..	2/..	3/..	4/..
30	22900-03210	22900-03211	22900-03212	22900-03213
38	22900-00403	22900-00401	22900-00401	22900-00401
44	22900-03110	22900-03111	22900-03112	22900-03113
45	22800-00500	22800-00510	22800-00510	22800-00510
46	22800-00602	22800-00611	22800-00611	22800-00611

GB WIRING DIAGRAM ARCTIC COMPACT 5/8 LT MODEL

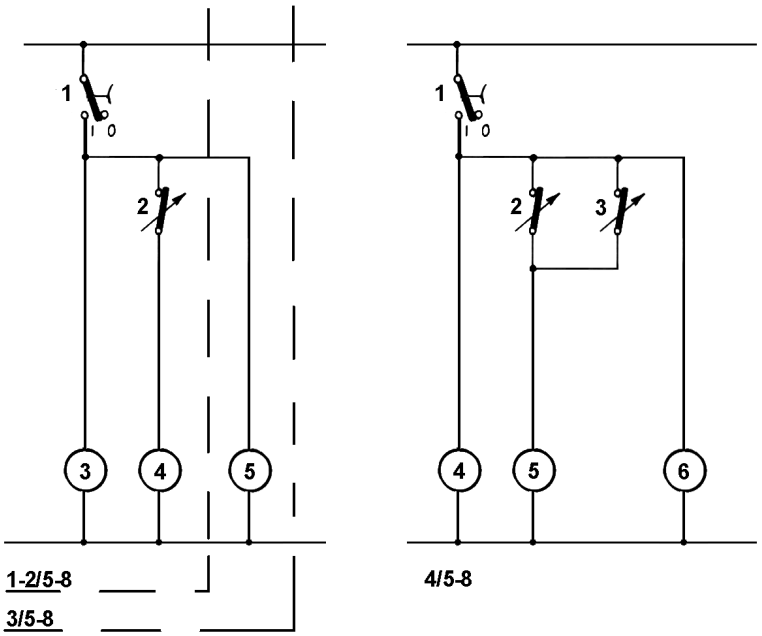

1/5-8 - 2/5-8 - 3/5-8

1	Switch
2	Thermostat
3-5	Pump/mixer
4	Compressor

4/5-8

1	Switch
2-3	Thermostat
4-6	Pump/mixer
5	Compressor

The following Spare Parts List, extracted from the Operator's Manual, are quoted here too for general reference only. To order spare parts please make refernece to the Spare Part List included in the Operator's Manual supplied with each dispenser.

GB

SPARE PARTS LIST ARCTIC COMPACT 12/20 LT MODEL

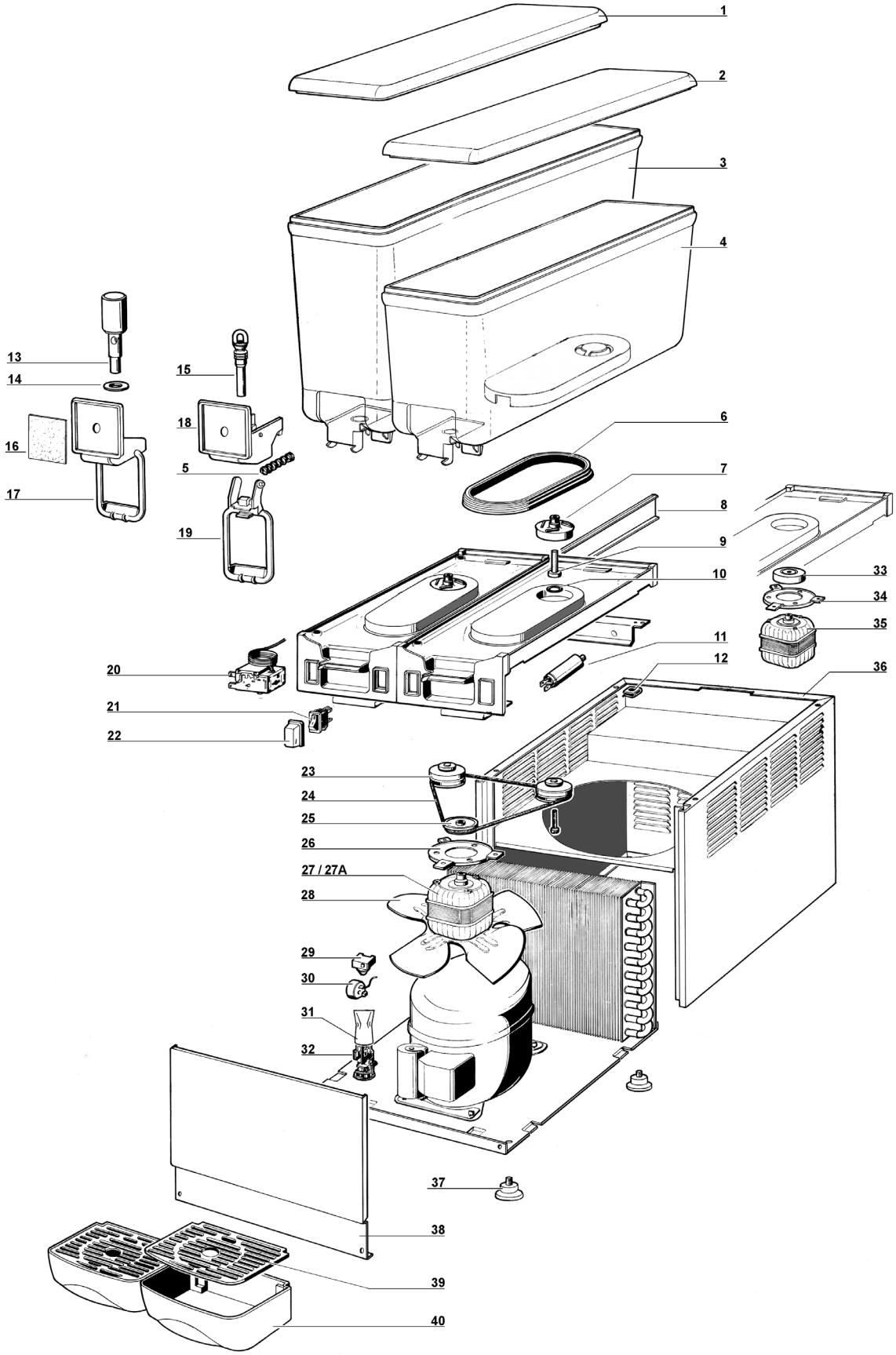

1	**22900-00100**	20 lt bowl cover
2	**22900-00100**	12 lt bowl cover
3	**22900-04810**	20 lt bowl
4	**22900-00010**	12 lt bowl
5	**22800-02600**	Faucet spring
6	**22800-17200**	Bowl gasket
7	**33900-01201**	Impeller
8	**22900-00700**	Plastic I-beam for connection
9	**22900-00600**	Central pivot
10	**22040-00000**	Central pivot OR
11	**22900-03051**	Capacitor
12	**10554-45000**	Clip
13	**22800-21900**	Faucet piston
14	**10028-02500**	Faucet gasket
15	**21703-00000**	Pinch tube
16	**10029-00000**	Picture
17	**22900-00500**	Push handle
18	**22900-00800**	Faucet cover
19	**22900-00501**	Push handle
20	**21087-00000**	Thermostat
21	**21125-00000**	Switch
22	**22800-05100**	Switch cap
23	**33900-01051**	Pulley, magnet and spacer assembly
24	**22900-03601**	Belt
25	**22800-02201**	Driving pulley
26	**22800-04800**	Motor bracket
27	**22800-18921**	Fan/pump motor for 1 bowl
27A	**22900-03001**	Fan/pump motor for 2, 4 bowls
28	❑❑❑	Fan
29	✻✻✻	Relay
30	✻✻✻	Overload protector
31	**22800-12700**	Terminal block cover
32	**22800-05500**	Terminal block with cable clamp
33	**33800-00803**	Motor magnet for 1, 3 bowls
34	**22800-04800**	Motor bracket
35	**22800-04706**	Pump motor 3 bowls
36	❑❑❑	Cabinet
37	**22800-10000**	Rubber leg
38	❑❑❑	Dispensing side panel
39	**22900-03700**	Drip tray cover
40	**22900-03800**	Drip tray

✻✻✻ **Please order what printed on piece**

❑❑❑ **See table**

❑❑❑

	1/..	2/..	3/..	4/..
28	22900-00400	22900-00402	22900-00402	22900-00402
36	22900-03200	22900-03201	22900-03202	22900-03203
38	22900-03100	22900-03101	22900-03102	22900-03103

GB WIRING DIAGRAM ARCTIC COMPACT 12/20 LT MODEL

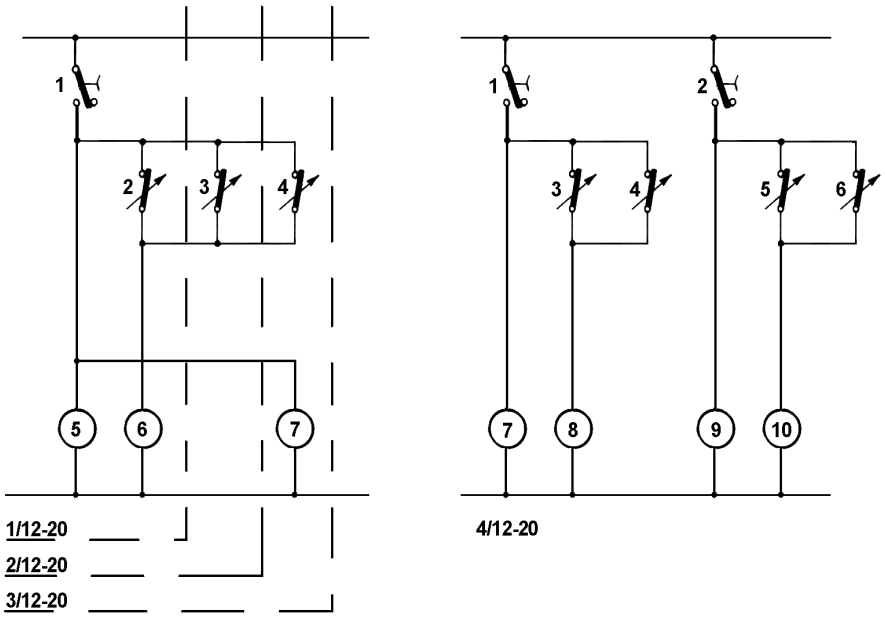

1/12-20 - 2/12-20 - 3/12-20

1	Switch
2-3-4	Thermostat
5-7	Pump/mixer
6	Compressor

4/12-20

1-2	Switch
3-4-5-6	Thermostat
7-9	Pump/mixer
8-10	Compressor

The following Spare Parts List, extracted from the Operator's Manual, are quoted here too for general reference only. To order spare parts please make refernece to the Spare Part List included in the Operator's Manual supplied with each dispenser.

GB SPARE PARTS LIST ARCTIC DELUXE 12/20 LT MODEL

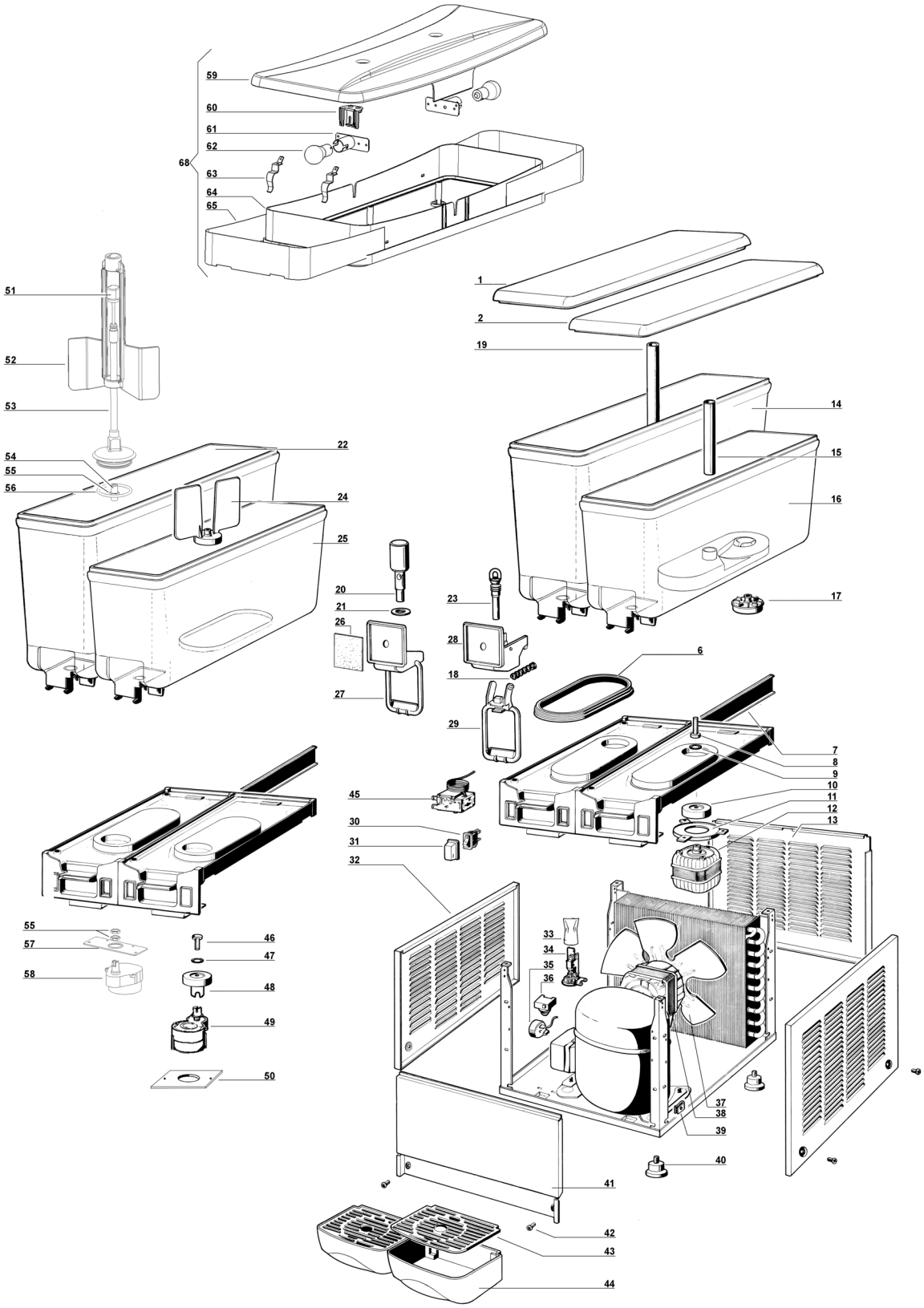

1	**22900-00100**	20 lt bowl cover
2	**22900-00100**	12 lt bowl cover
6	**22800-17200**	Bowl gasket
7	**22900-00700**	Plastic I-beam for connection
8	**22900-00600**	Central pivot
9	**22040-00000**	Central pivot OR
10	**33800-00803**	Motor magnet
11	**22800-04800**	Motor bracket
12	**22800-04706**	Motor
13	❑❑❑	Back panel
14	**22900-04800**	20 l bowl for pump
15	**22900-00201**	Spray tube for 12 l bowl
16	**22900-00000**	12 l bowl for pump
17	**33900-01204**	Impeller 60Hz
18	**22800-02600**	Faucet spring
19	**22900-00200**	Bent tube for 20 l bowl
20	**22800-21900**	Faucet piston
21	**10028-02500**	Faucet gasket
22	**22900-04820**	20 l bowl for stirrer
23	**21703-00000**	Pinch tube
24	**33900-01202**	Stirrer
25	**22900-00020**	12 l bowl for stirrer
26	**10029-00000**	Picture
27	**22900-00500**	Push handle
28	**22900-00800**	Faucet cover
29	**22900-00501**	Push handle
30	**21125-00000**	Switch
31	**22800-05100**	Switch cap
32	**22800-00300**	Side panel
33	**22800-12700**	Terminal block cover
34	**22800-05500**	Terminal block with cable clamp
35	✻✻✻	Overload protector
36	✻✻✻	Relay
37	**21907-00000**	Fan for 12 lt.
37A	**22800-13200**	Fan for 20 lt.
38	**22800-04706**	Fan motor for 12 lt.
38A	**22800-04709**	Fan motor for 20 lt.
38B	**33800-06901**	Fan motor for 1 bowl
39	**10554-45001**	Clip
40	**22800-10000**	Rubber leg
41	❑❑❑	Dispensing side panel
42	**10502-55010**	Stainless steel fixing screw for panel
43	**22900-03700**	Drip tray cover
44	**22900-03800**	Drip tray
45	**21087-00000**	Thermostat
46	**22900-02502**	Central pivot
47	**22900-02503**	Washer
48	**33900-01011**	Impeller mixer motor
49	**22900-03501**	Mixer motor
50	**22900-02504**	Pump motor bracket
51	**22900-05600**	Driving shaft 12lt
51	**22900-05601**	Driving shaft 20lt
52	**22900-05400**	Stirrer 12lt
52	**22900-05401**	Stirrer 20lt
53	**22900-05500**	Central shaft 12lt
53	**22900-05501**	Central shaft 20lt
54	**10028-01801**	tube for central shaft
55	**10533-01303**	brass nut
56	**22900-05700**	Central shaft OR.
57	**22900-02504**	Pump motor bracket
58	**33800-06701**	Mixer motor
59	**22900-06200**	Top cover upper part
60	**10028-04201**	Plate holder for
61	**10028-04200**	Bulb socket
62	**10028-03800**	28V bulb
63	**22800-11701**	Top cover light contact
64	**22900-06020**	Bottom hat mechanical agitation with light
64	**22900-06030**	Bottom hat mechanical agitation without light
64	**22900-06050**	Bottom hat with light insulated
64	**22900-06051**	Bottom hat without light insulated
64	**22900-06000**	Bottom hat without light not insulated
65	**22900-06400**	Picture
68	**33900-02100**	Cover complete with light insulated
68	**33900-02200**	Cover complete without light insulated
68	**33900-02300**	Cover complete without light not insulated
68	**33900-01800**	Cover with light to complete mechanical shaker
68	**33900-01900**	Cover complete without light for mechanical shaker

✻✻✻ **Please order what printed on piece**

❑❑❑ **See table**

❑❑❑

	1/..	**2/..**	**3/..**	**4/..**
13	22800-06800	22900-02310	22900-02320	22900-02330
41	22800-21600	22800-21700	22800-21800	22900-04100

GB WIRING DIAGRAM ARCTIC DELUXE 12/20 LT MODEL

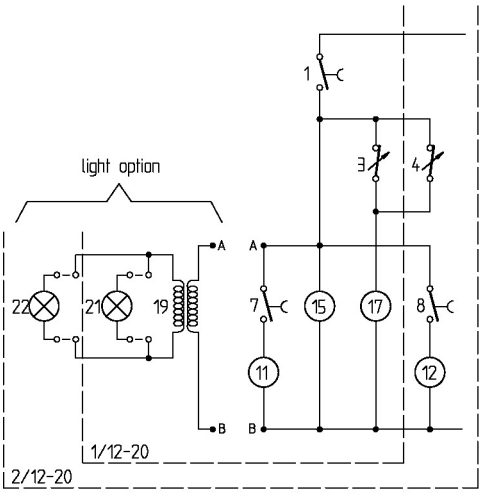

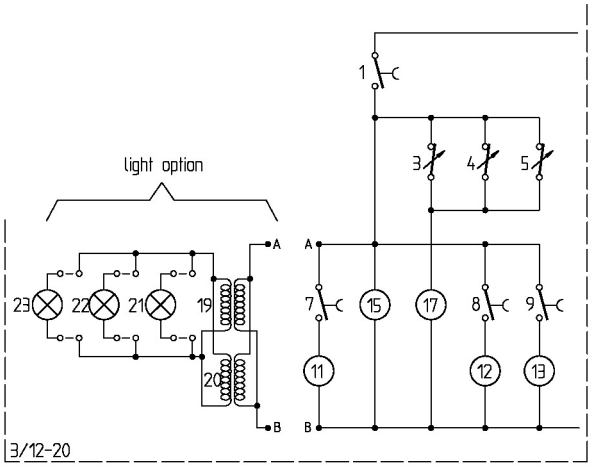

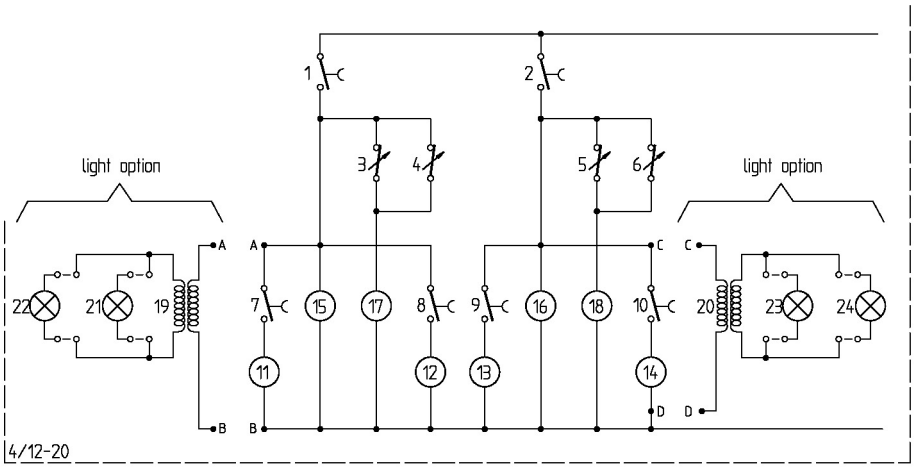

1-2	Switch
3-4-5-6	Thermostat
7-8-9-10	Pump/mixer switch
11-12-13-14	Pump/mixer
15-16	Fan Motor
17-18	Compressor
19-20	Transformer
21-22-23-24	Top light

NOTES:

NOTES:

NOTES:

1 GENERAL TROUBLESHOOTING GUIDE

PROBLEM	CAUSE	REMEDY
No working at all. Neither pump motors, fan motor nor compressor run	Improper or faulty electrical connection	Locate and correct the problem
	Defective main switch	Replace main switch
No refrigeration at all. Pump motors and fan motor run but compressor does not run	Defective overload protector or relay of compressor	Replace overload protector
	Compressor cycles on overload protector	Check the power line for low voltage and then check starting relay and overload protector and if necessary replace them
	Defective thermostat (always open)	Replace thermostat
No or poor refrigeration	Not enough air flow for ventilation	Provide at least 15 cm (6") of free air space all around the unit
	Condenser clogged with dust	Clean the condenser using compressed air, vacuum or a soft brush. Condenser fins are very sharp, use extreme caution
	Defective fan motor	Check for possible obstacles to fan blade rotation. If necessary replace fan motor
	Poor refrigerant gas charge	Detect possible leak, seal it and make new refrigerant charge
Excessive refrigeration. Compressor never stops.	Wrong temperature adjustment	Adjust temperature setting
	One defective thermostat (always closed)	Replace thermostat
	One thermostat temperature probe out from its housing	Insert thermostats temperature probes properly into their housings
No pumping or agitation, pump motor runs	Pump impeller does not spin at all	Clean both impeller and pivot from traces of product and if necessary lubricate them with food grade grease.
	Pump impeller does not spin freely on pivot	Check for worn impeller and if necessary replace it.
	Magnetic lock decoupling (chattering)	Verify planarity of pump motor bracket
No pumping or agitation, pump motor doesn't run	Improper or faulty electrical connection	Locate ad correct the problem
	Defective pump switch	Replace pump switch
	Defective pump motor	Replace pump motor
	Drive magnet binds on evaporator assebly	Verify planarity of pump motor bracket
	Broken transmission belt (Arctic Compact series with multiple bowls only)	Replace transmission belt
Leak from bowls	Bowl fastening hook not properly engaged	Engage bowl fastening hooks
	Bowl gasket wrongly fitted	Fit bowl gasket properly around its seat
	Nicked or wrong bowl gasket	Replace bowl gasket
Dripping from faucets (pinch tube faucet)	Damaged or worn pinch tube.	Replace pinch tube
	Faucet handle out of closing position	Check faucet handle and/or its spring, replacing whichever damaged

PROBLEM	CAUSE	REMEDY
Dripping from faucets (gravity stainless steel faucet)	Nicked or wrong stainless steel gravity piston gasket	Replace stainless steel piston gasket
	Faucet piston out of closing position	Check for stainless steel piston free movement. If necessary clean both piston and bowl housing. Check for faucet handle free movement, if necessary replace faucet handle
	Bowls faucet rim damaged	Replace bowl
Noisy unit	Worn impellers	Replace impellers
	Bent fan blade	Re-bent fan blade to correct aligment
	Noisy fan or pump motor	Replace noisy motor
	Magnetic lock decoupling (chattering)	Verify planarity of pump motor bracket
	Noisy ball bearings (Arctic Compact series with multiple bowls only)	Replace magnetic pulley assembly
No magnetic slow mixer rotation	Defective drive motor	Replace drive motor
	Magnetic mixer does not rotate freely on pivot	Clean both mixer and pivot from traces of product and if necessary lubricate them with food grade grease
	Ice on the evaporator	Increase product level into the bowl Adjust temperature setting Check thermostats
No mechanic slow mixer rotation	Defective drive motor	Replace drive motor
	Product excessive thicknes	

ugolini

Ugolini spa • Via dei Pioppi, 33 • 20090 Opera (MI) • Tel. 02.5300591 • www.ugolinispa.com

2428_02 V0.4 14N01